TEAR SHEET

Darina Large Table Lamp

Item # ARN 3609PBL-L

Designer: AERIN

Height: 31"
Width: 20"
Base: 5.75" Round
Finishes: PBL, VI
Shade Treatments: L
Shade Details: 19" x 20" x 14.5"
Socket: E26 Dimmer
Wattage: 100 A19
Weight: 13 Pounds
Note: Reactive Ceramic Glazes Will Vary in Color and Texture

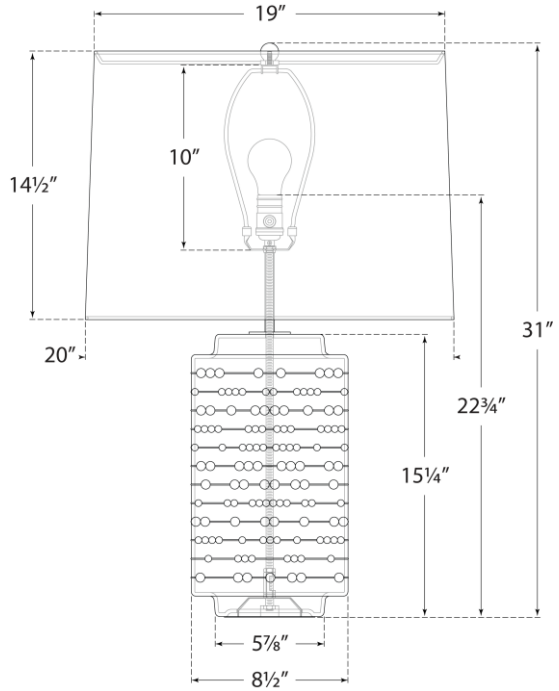

VISUAL COMFORT & CO.